| INDUCTANCE | WEIGHT |
|---|---|
| 0.014 mH | 195 Lbs |

| NO. | CHANGE DESCRIPTION | BY | DATE | C'K'D |
|---|---|---|---|---|

FILE: J:\ACLTWIN\CUSTDWG\CATRL\

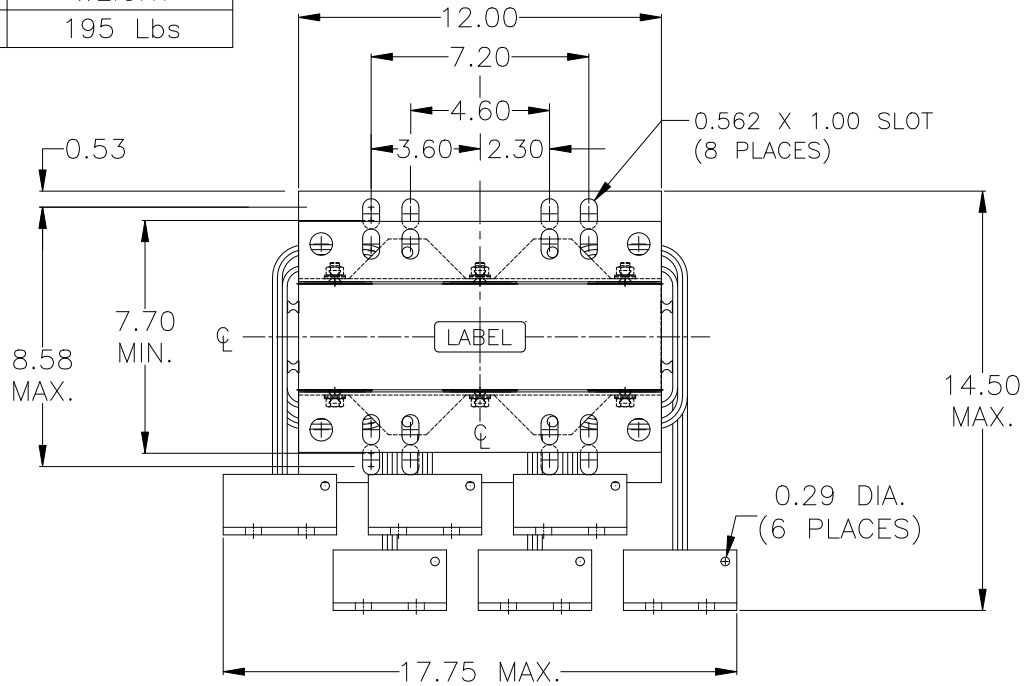


NOTES:
CENTER LINE REPRESENTS
CENTER OF REACTOR CORE

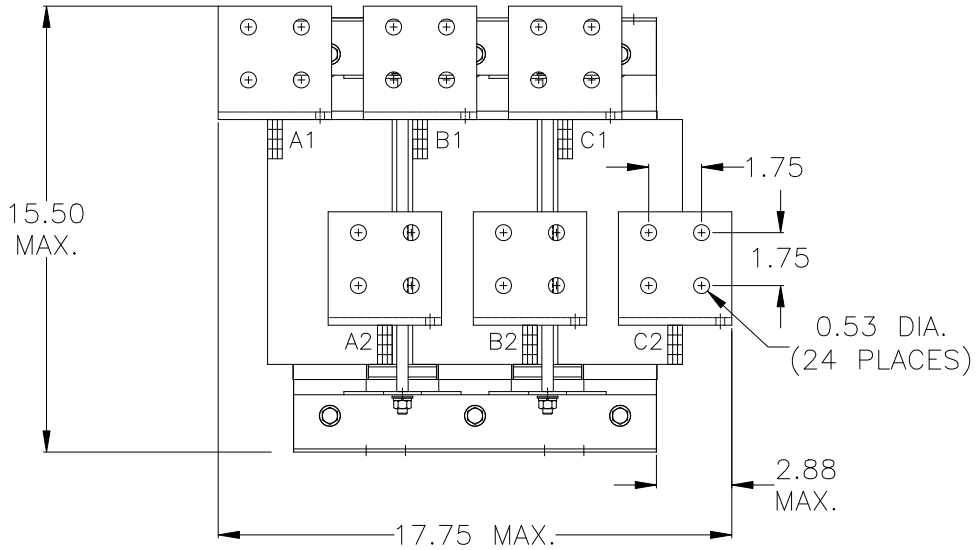


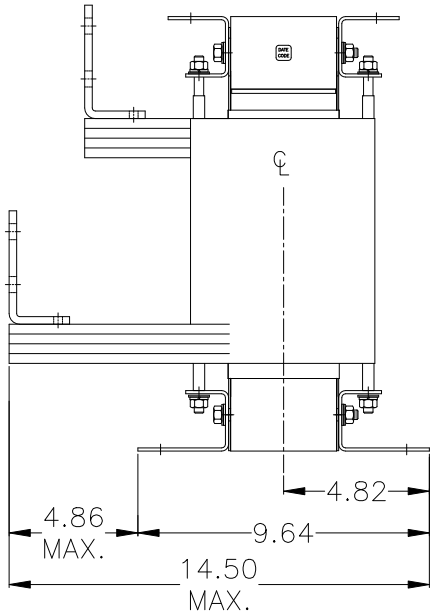


UNLESS OTHERWISE SPECIFIED, DIMENSIONS ARE IN INCHES [mm] AND TOLERANCES ARE:

DECI. ± FRAC. ±

ANGLES ± DRILLED HOLES ±

PART NAME: 3-PHASE REACTOR

DESCRIPTION: OUTLINE DIMENSION

FINISH: ---

MTE CORPORATION
MENOMONEE FALLS, WISCONSIN

CD RL-90001B14 REV. 00

| SCALE NTS | DATE 12/5/07 | C'K'D |
|---|---|---|
| REF. --- | DR. BY PDH | APP'D |