APPENDIX

Reference Drawings

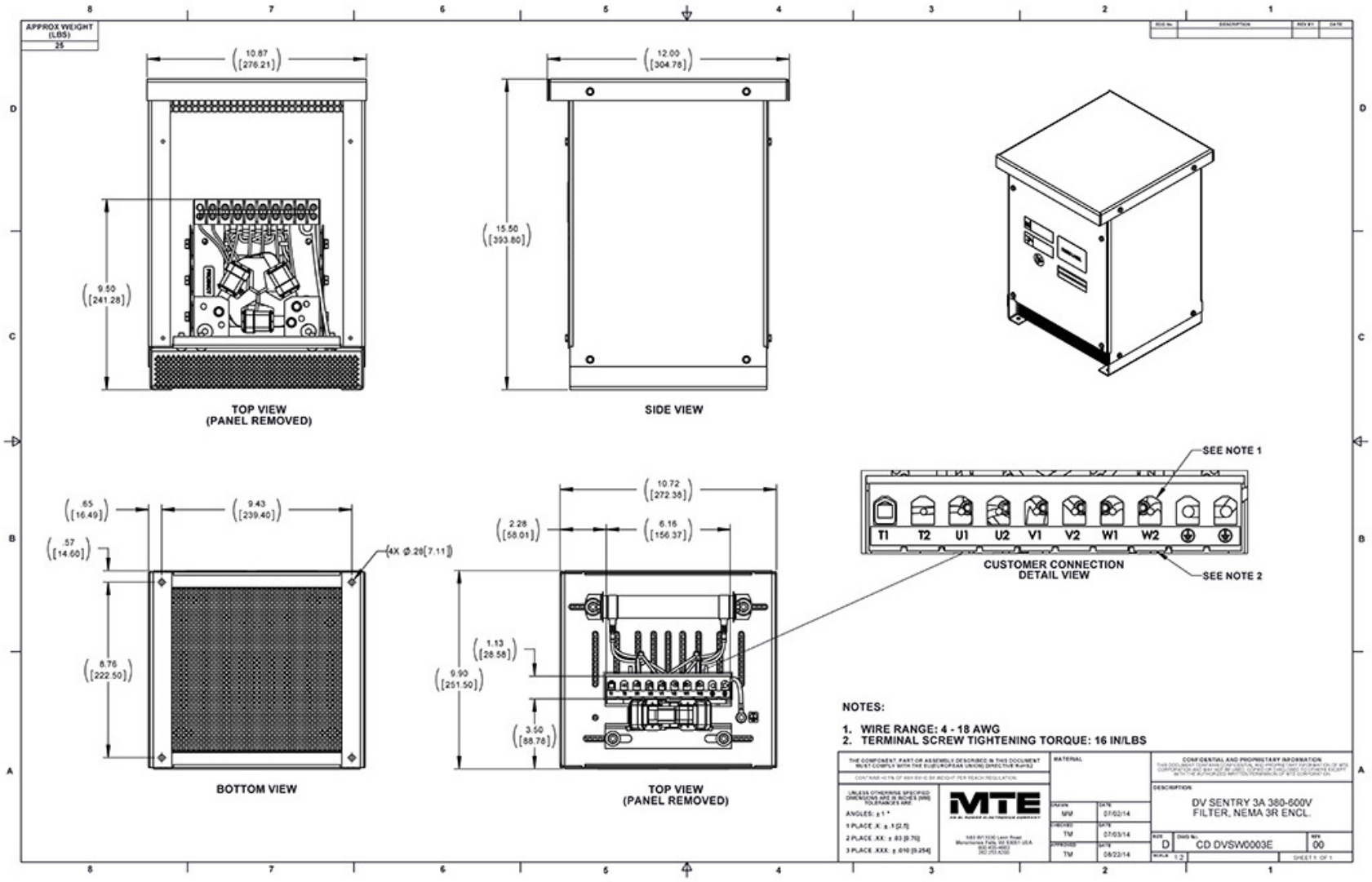

Figure A-47: DVSW0003E

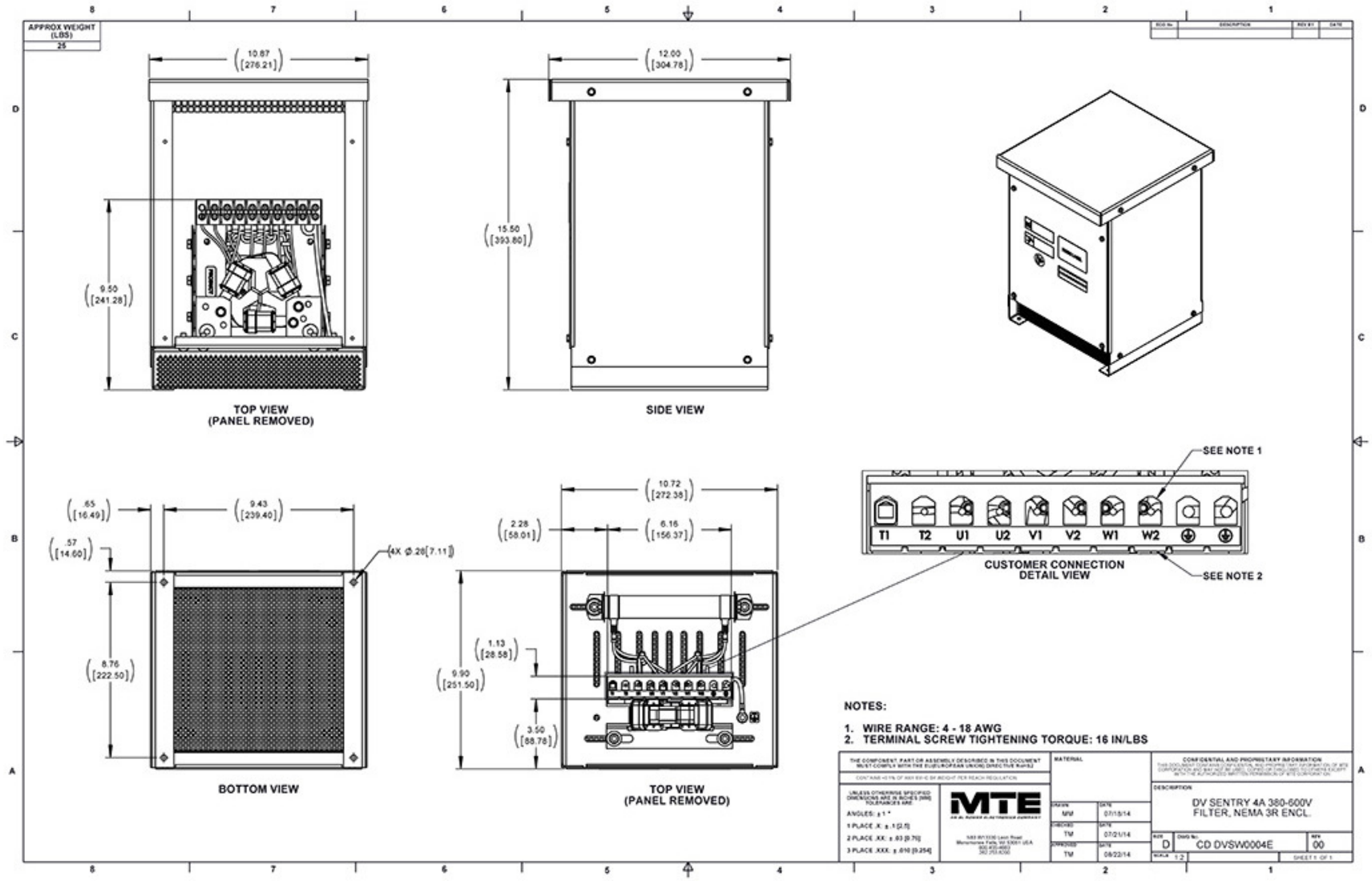

Figure A-48: DVSW0004E

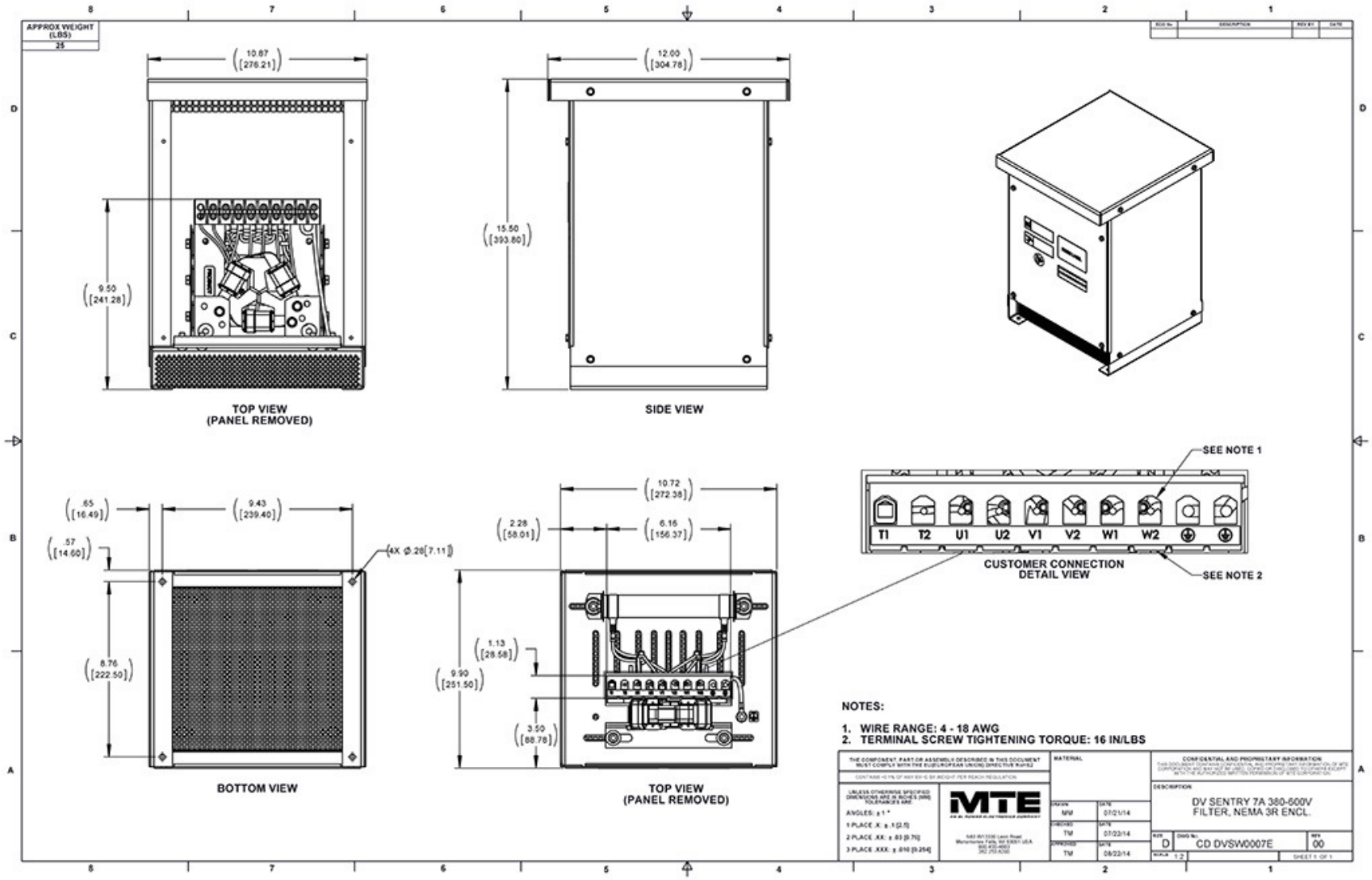

Figure A-49: DVSW0007E

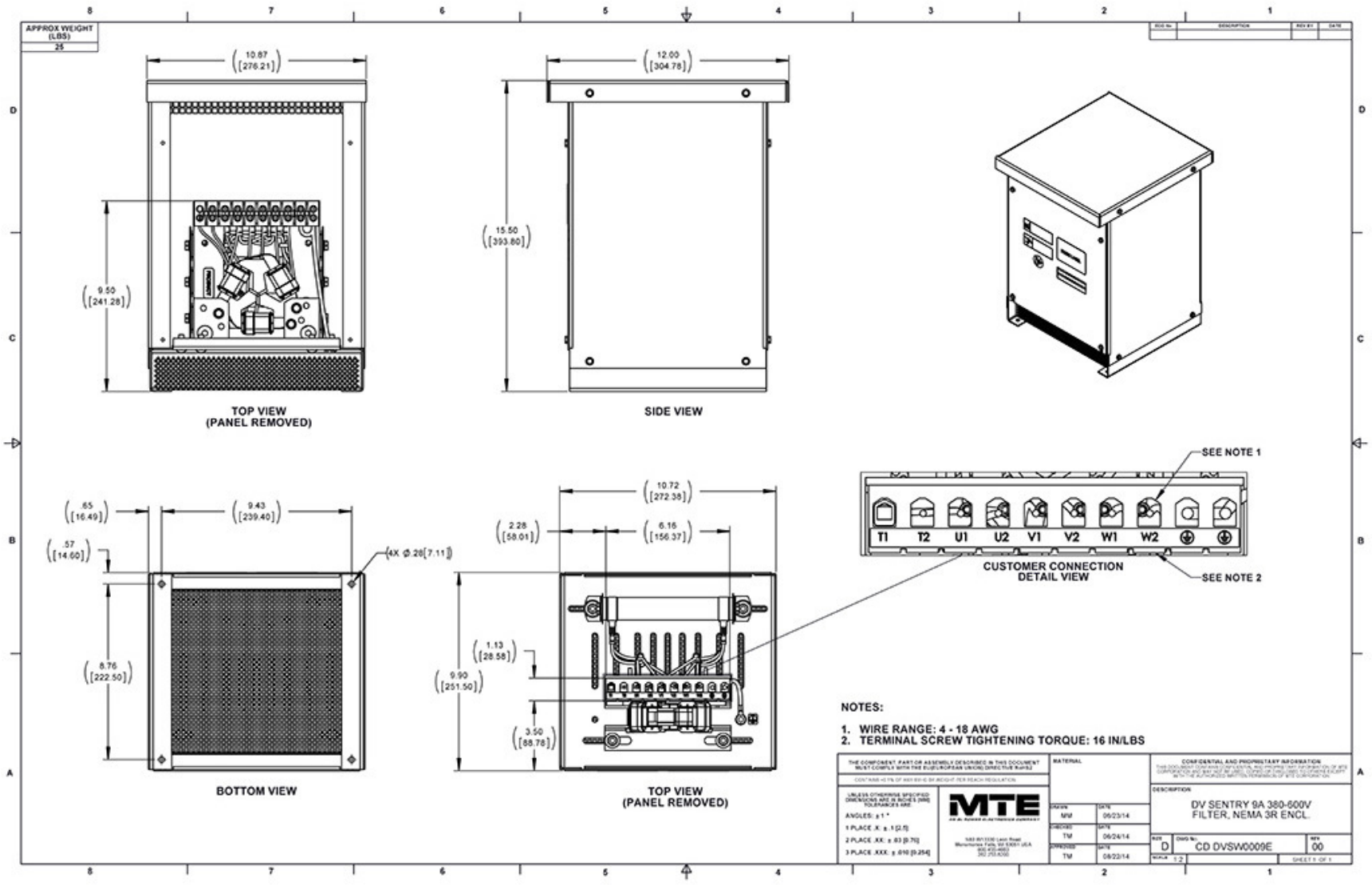

Figure A-50: DVSW0009E

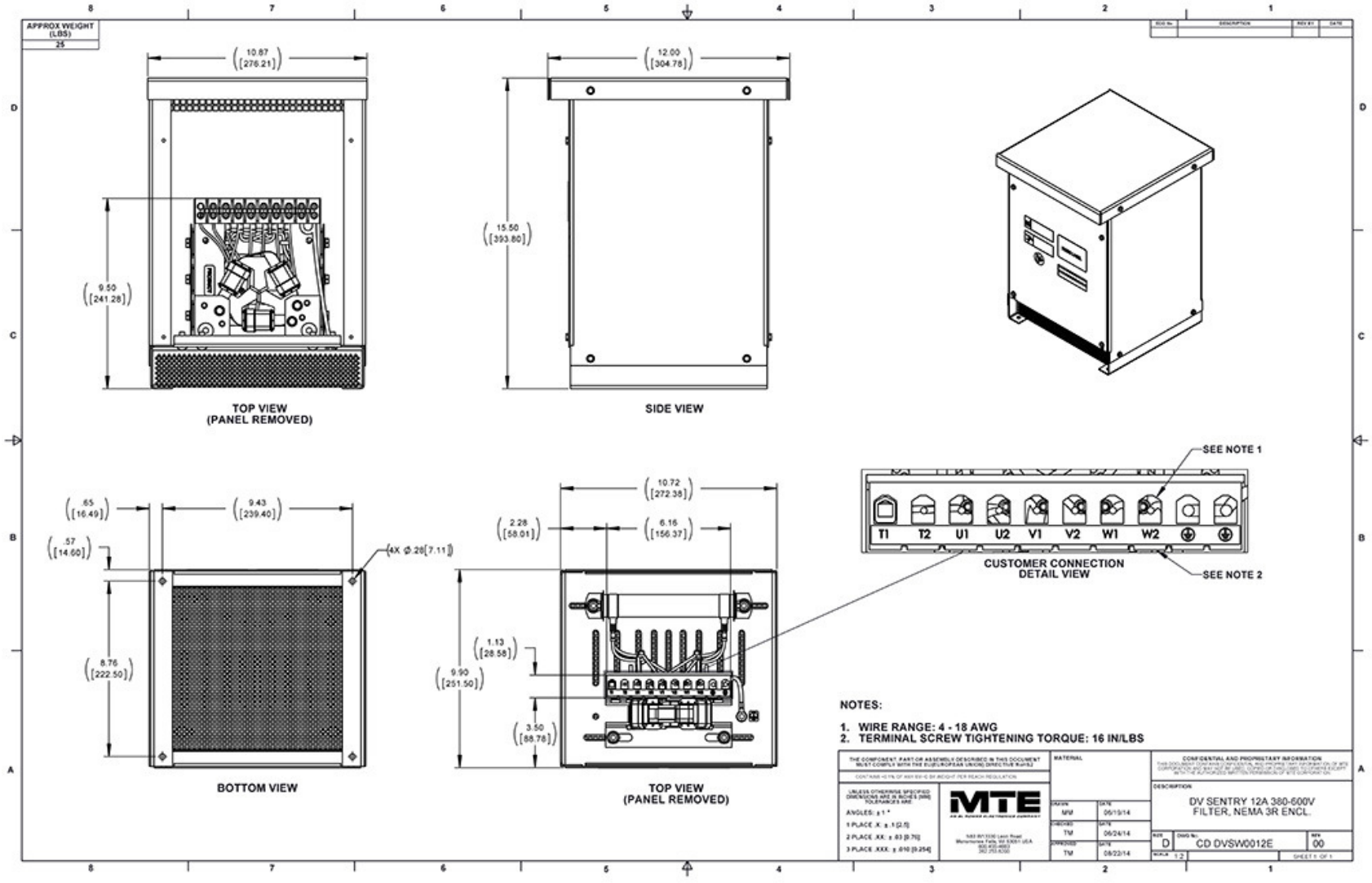

Figure A-51: DVSW0012E

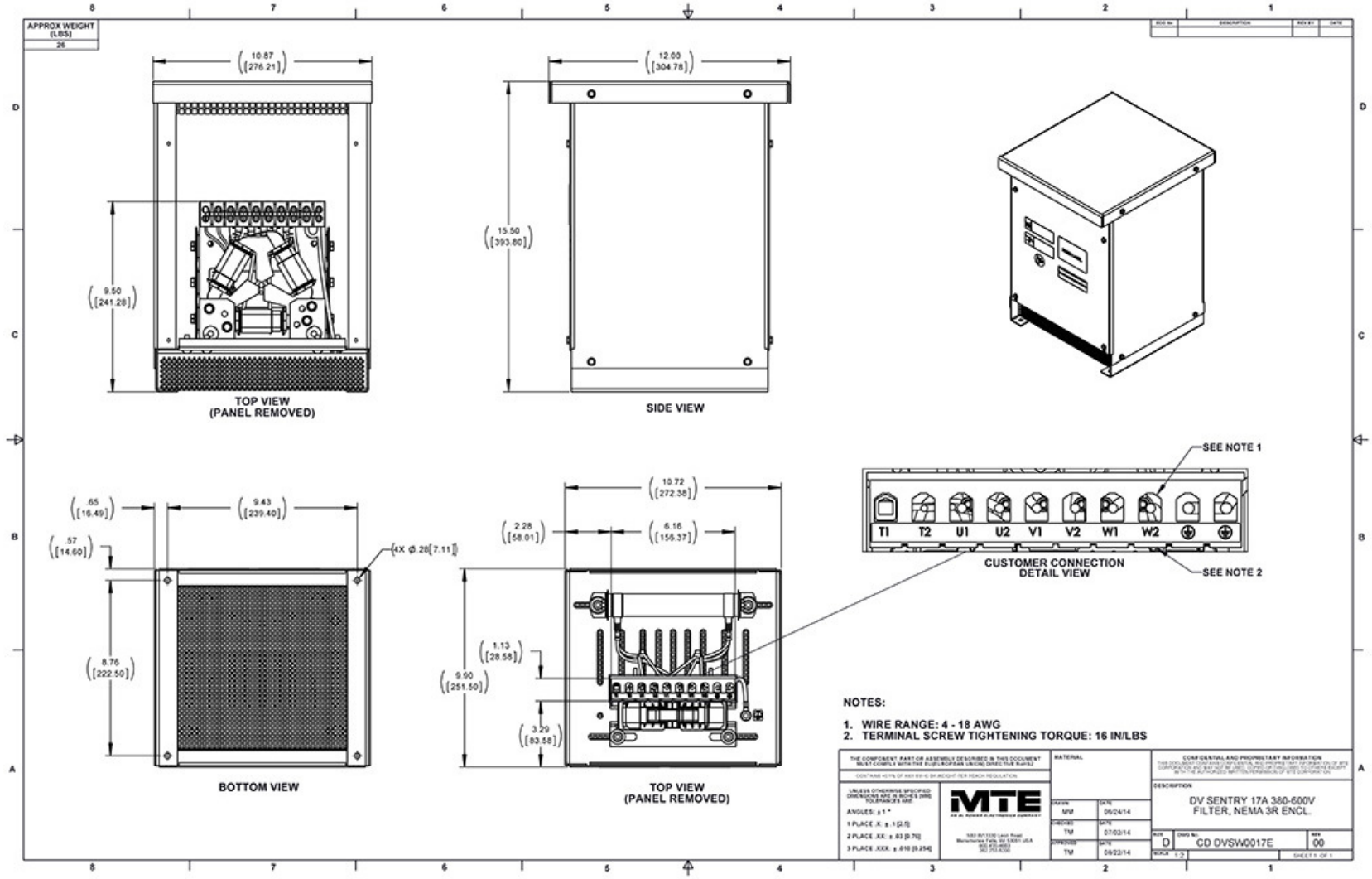

Figure A-52: DVSW0017E

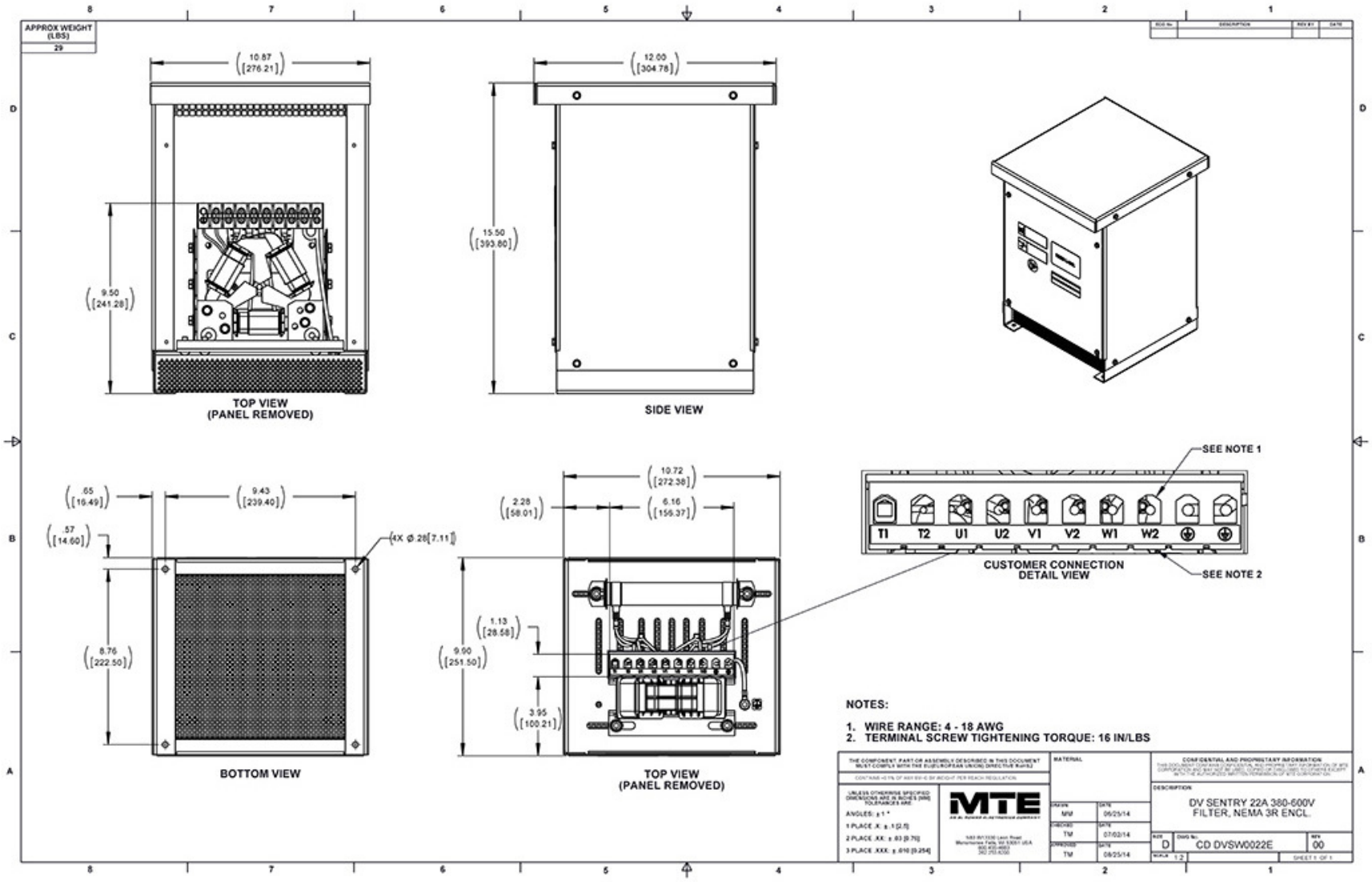

Figure A-53: DVSW0022E

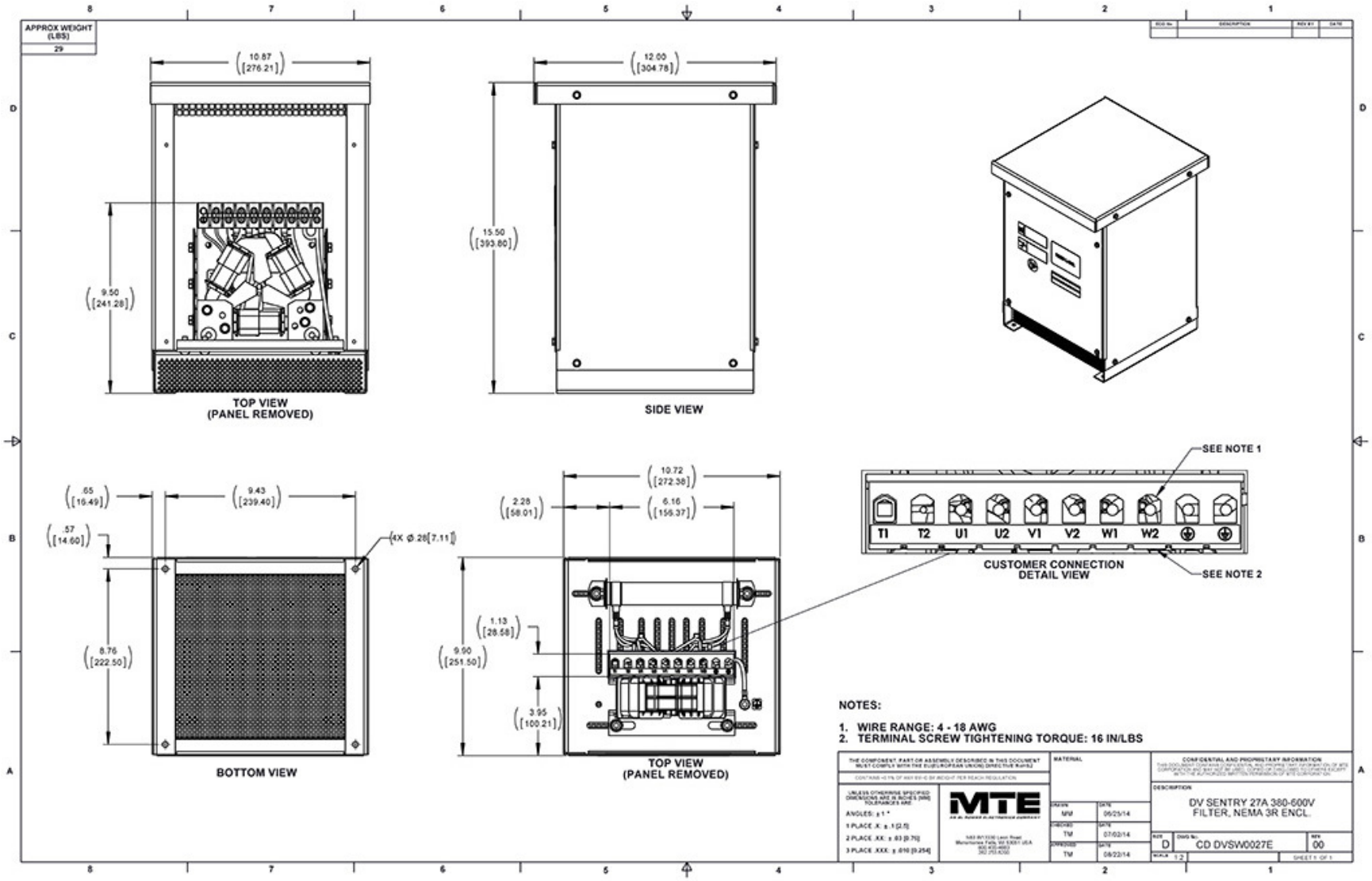

Figure A-54: DVSW0027E

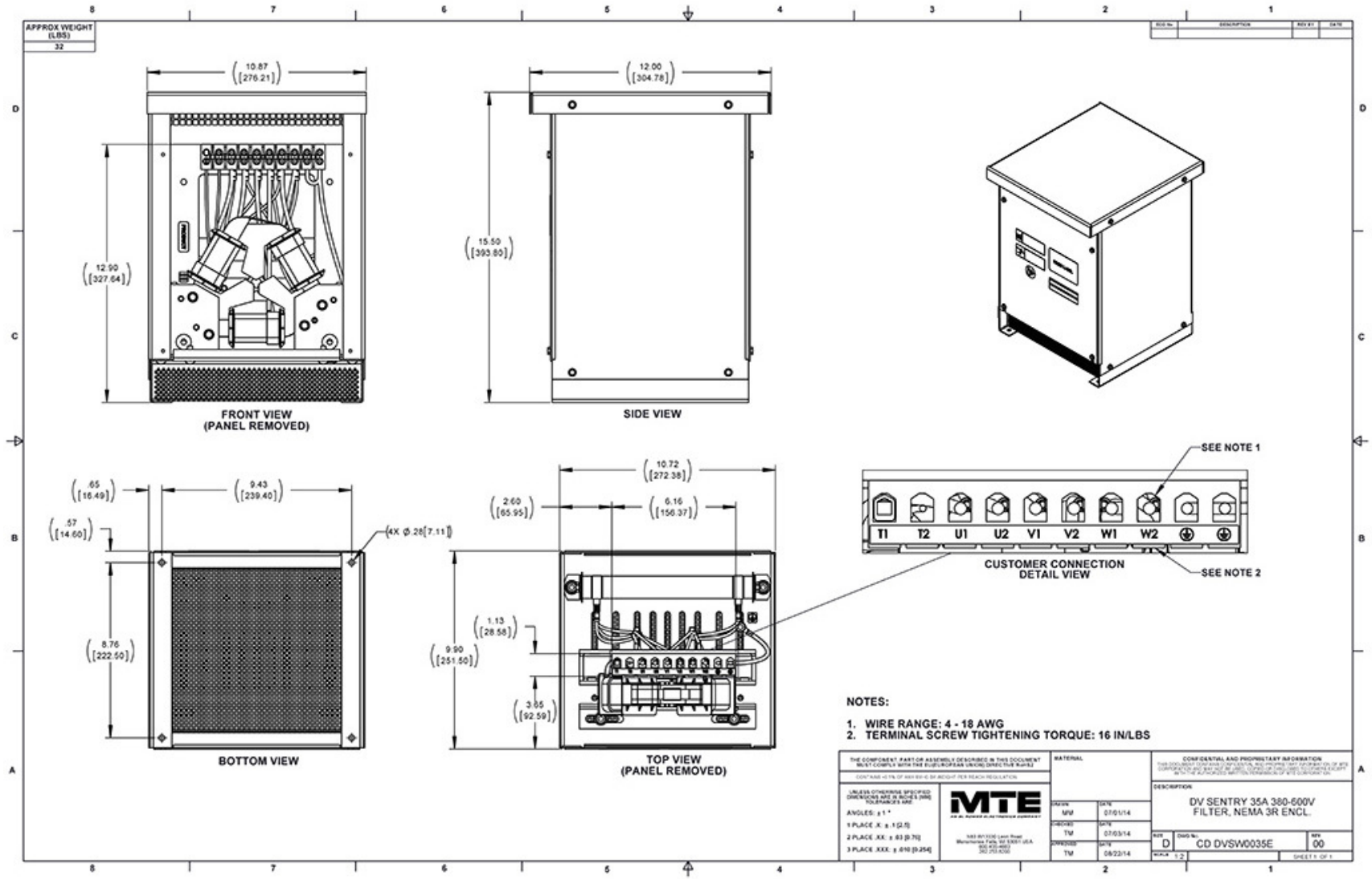

Figure A-55: DVSW0035E

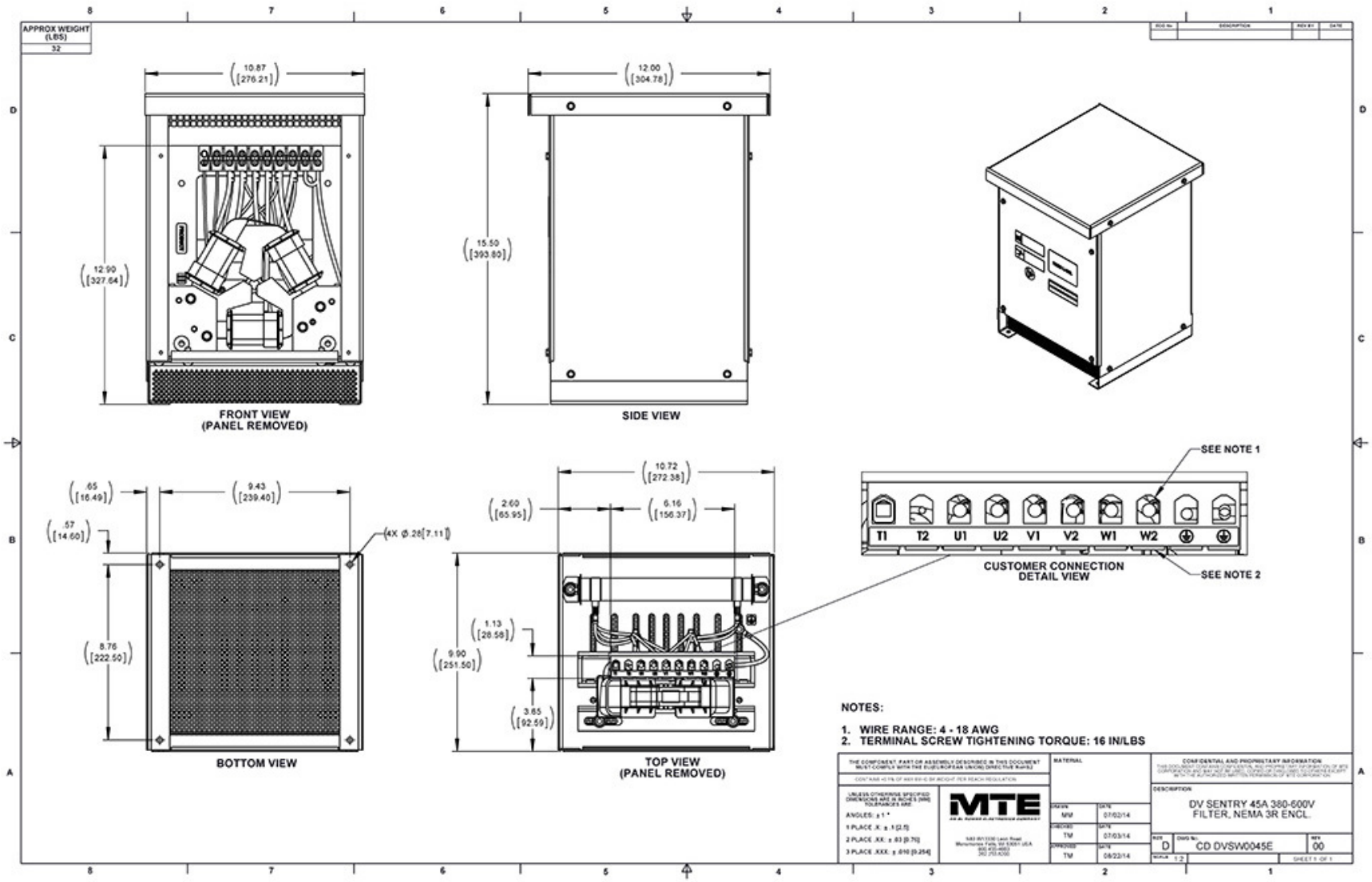

Figure A-56: DVSW0045E

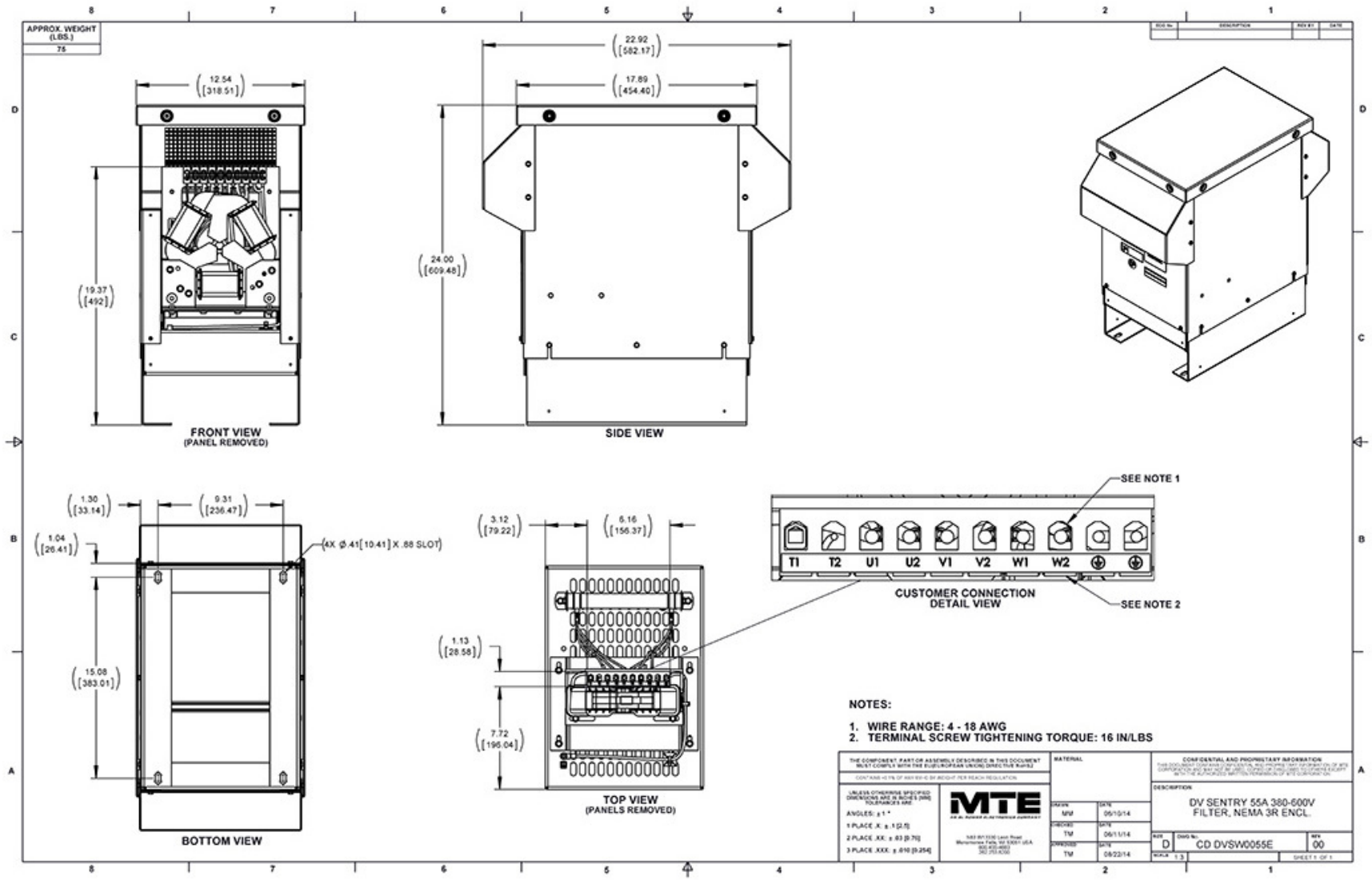

Figure A-57: DVSW0055E

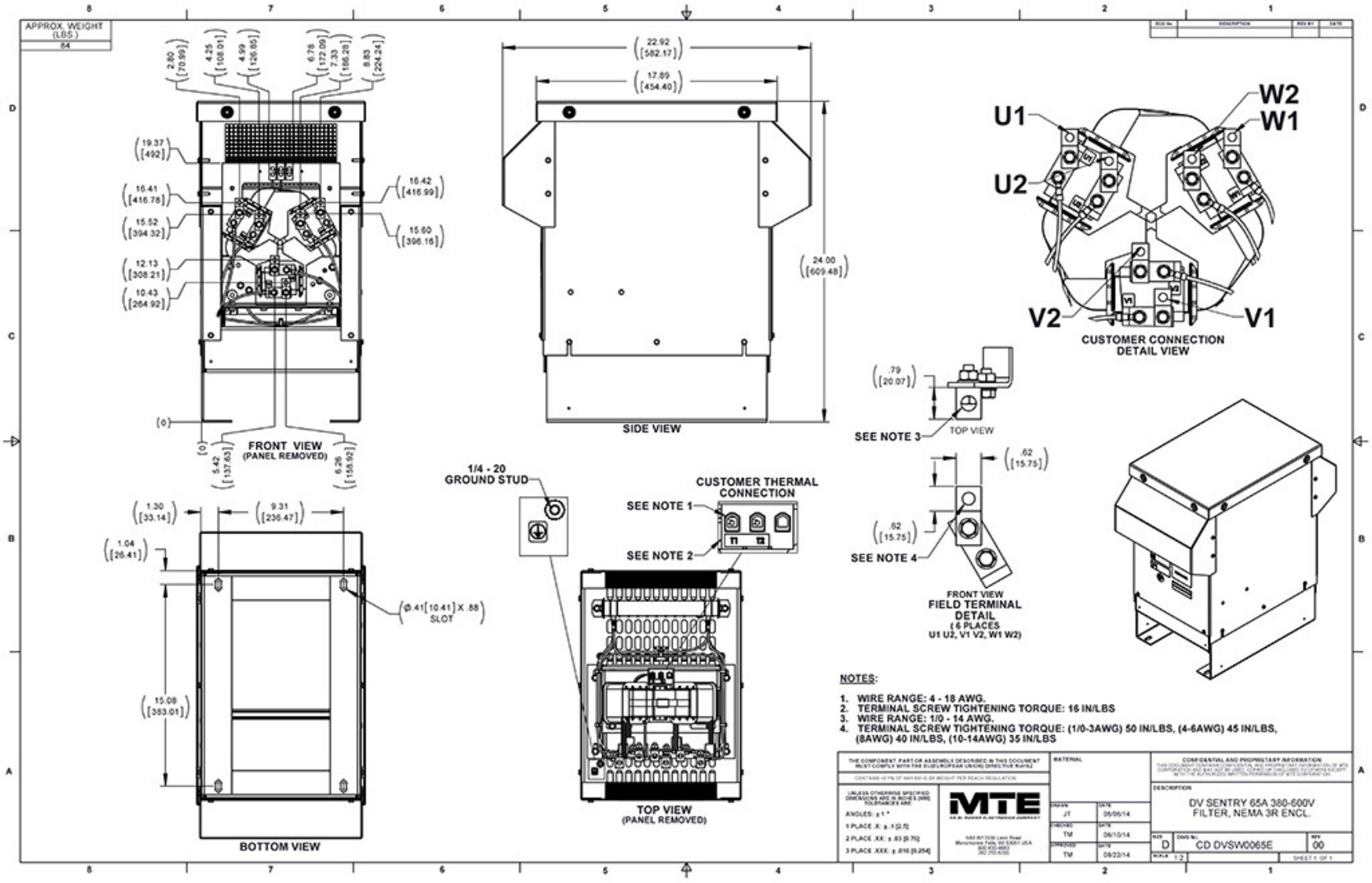

Figure A-58: DVSW0065E

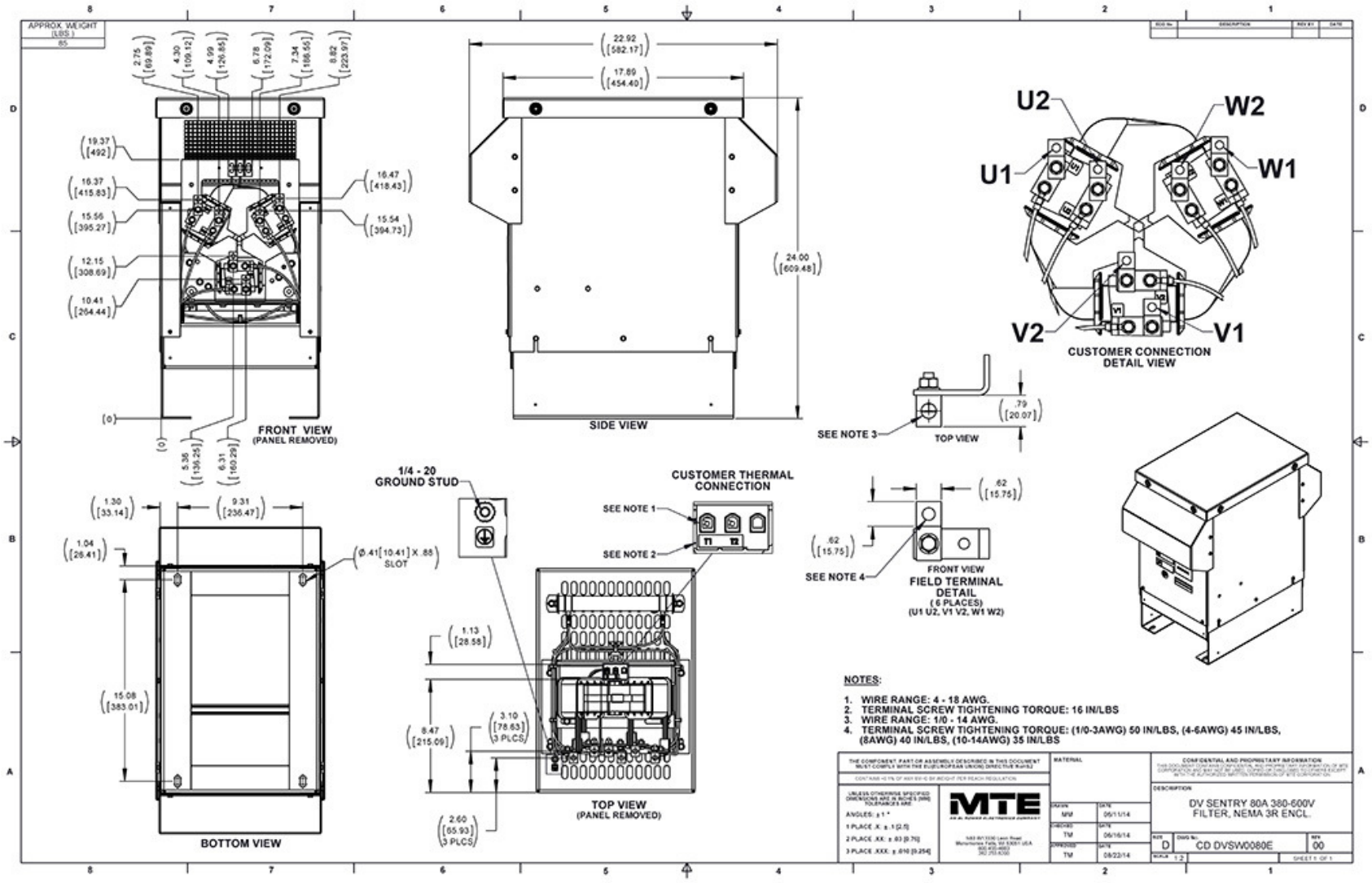

Figure A-59: DVSW0080E

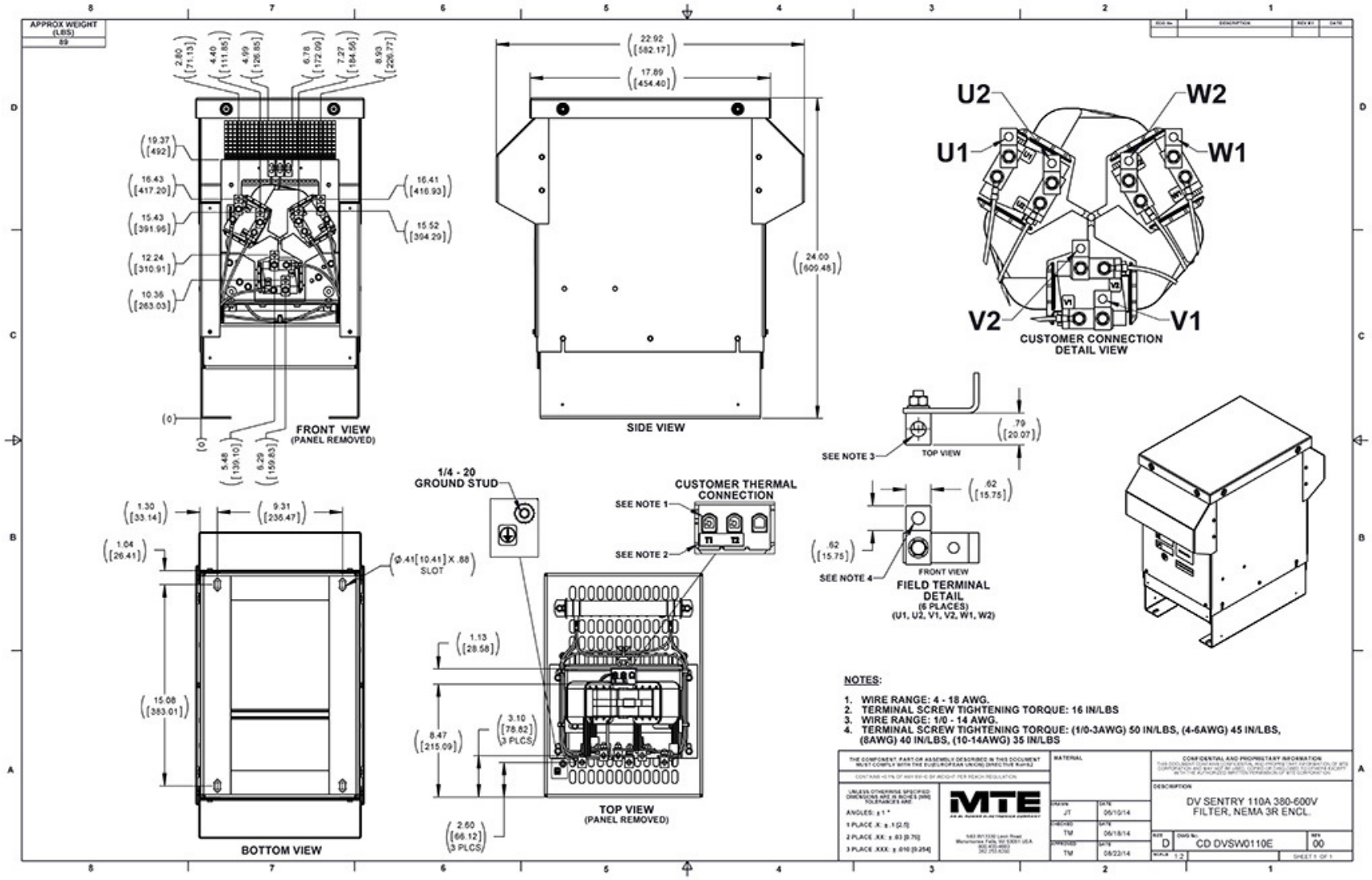

Figure A-60: DVSW0110E

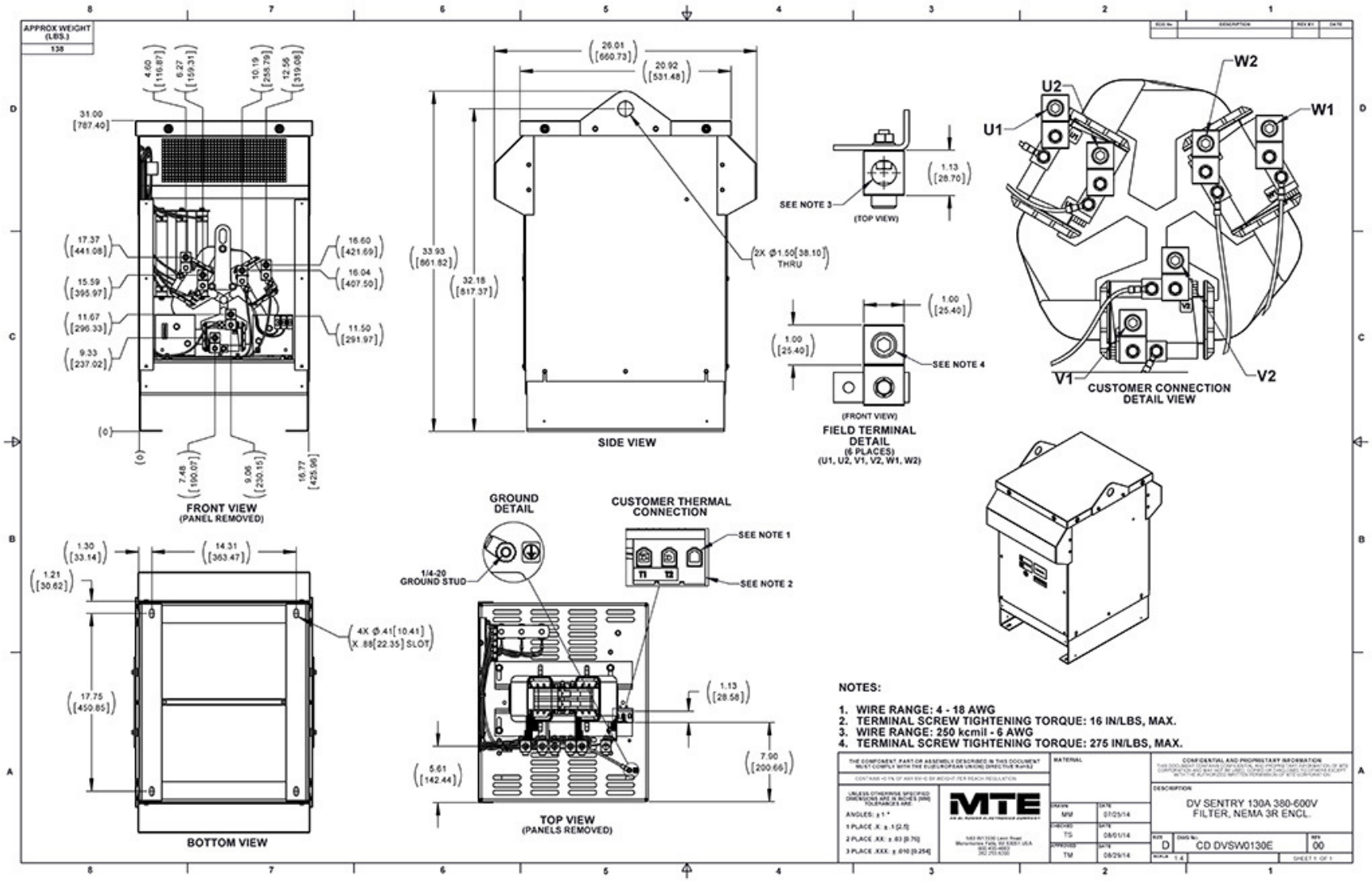

Figure A-61: DVSW0130E

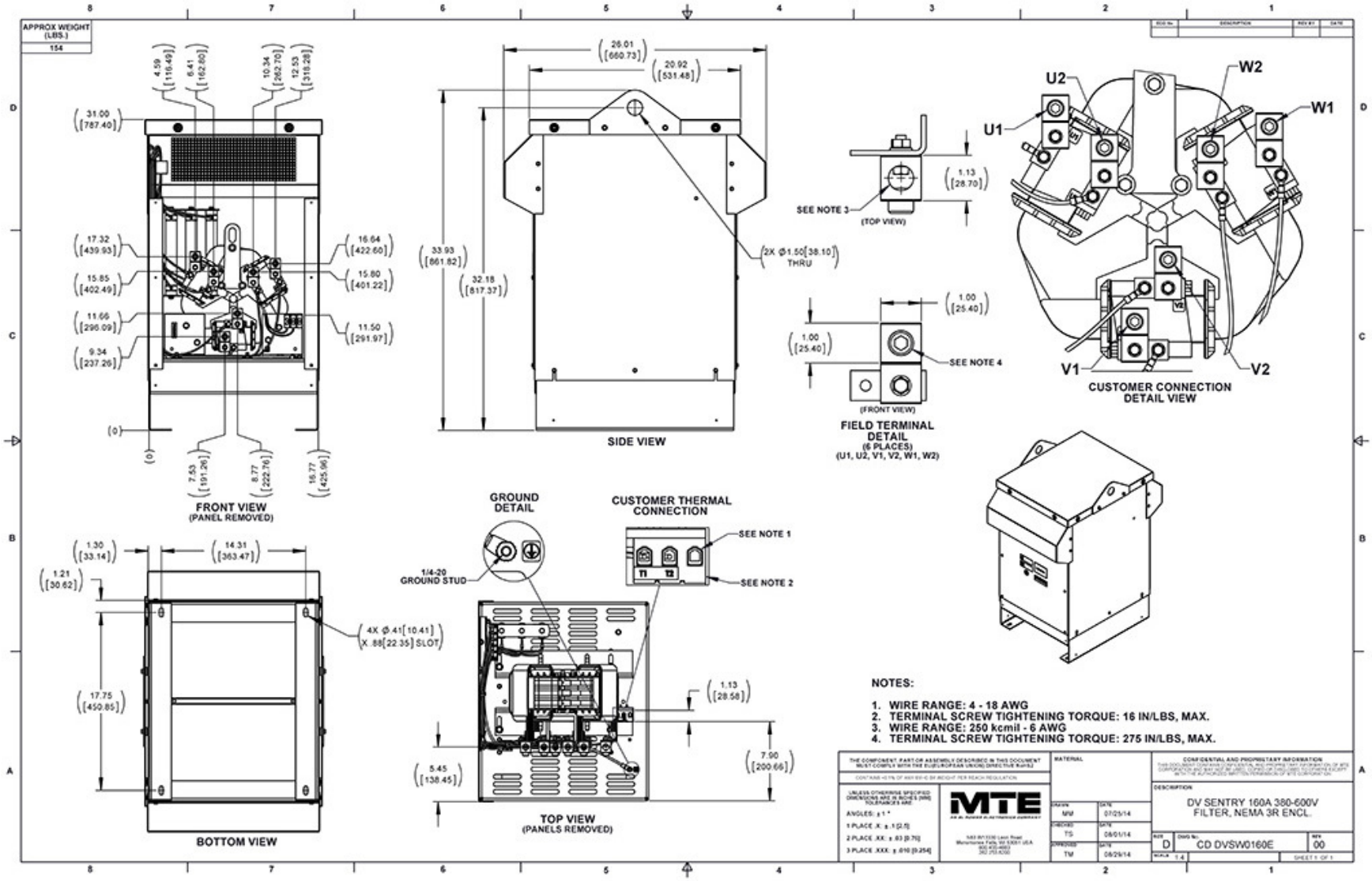

Figure A-62: DVSW0160E

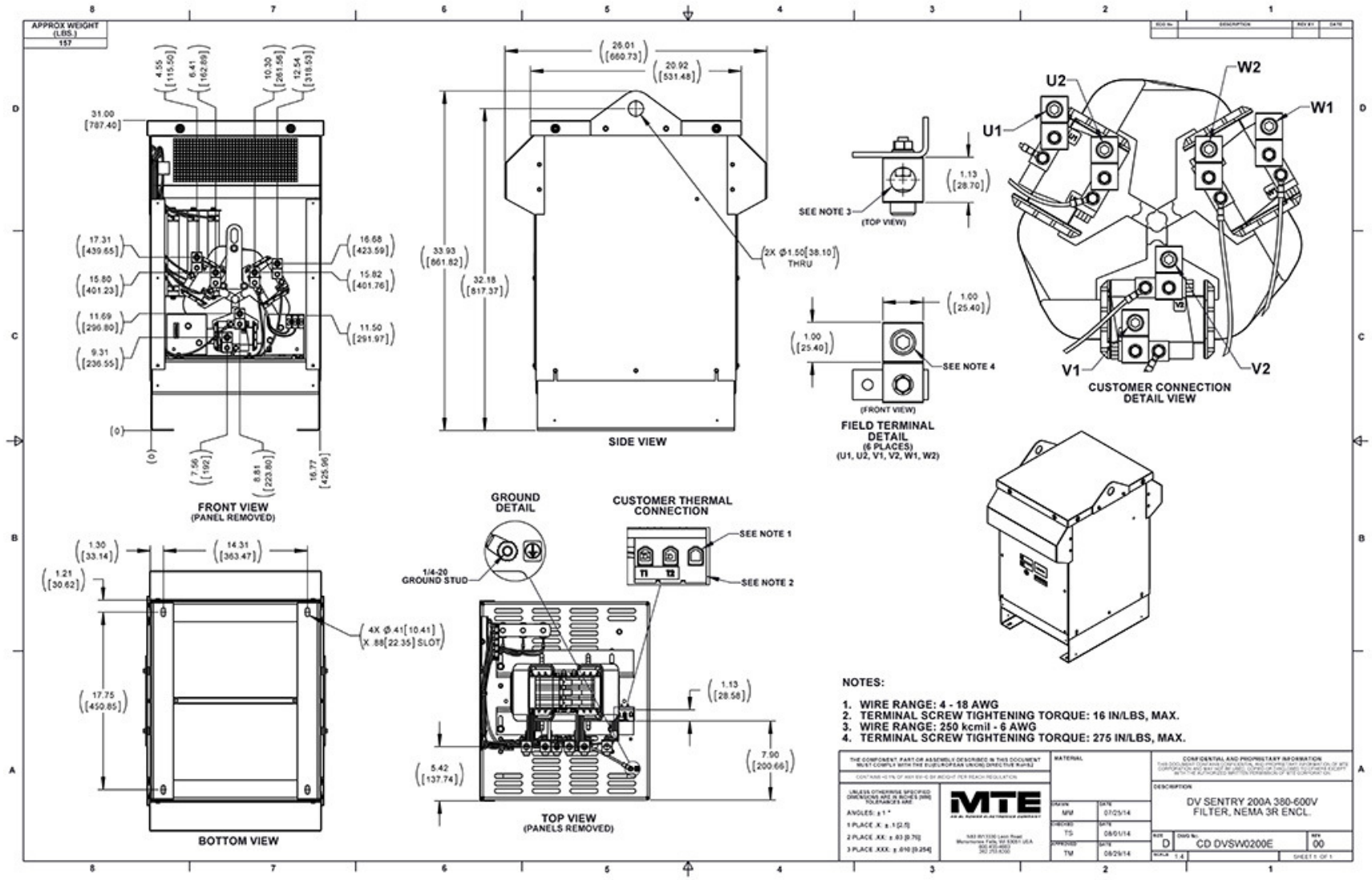

Figure A-63: DVSW0200E

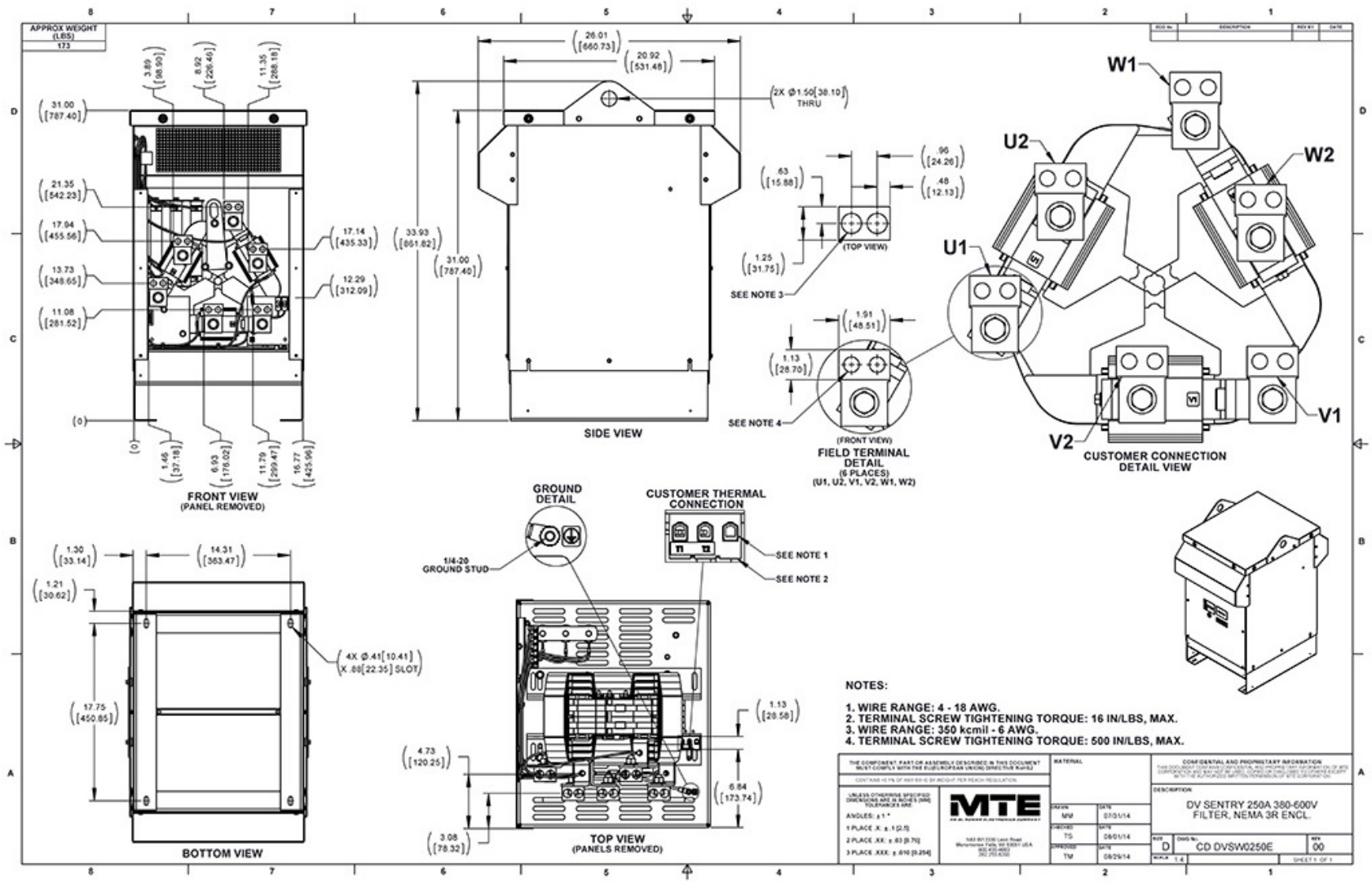

Figure A-64: DVSW0250E

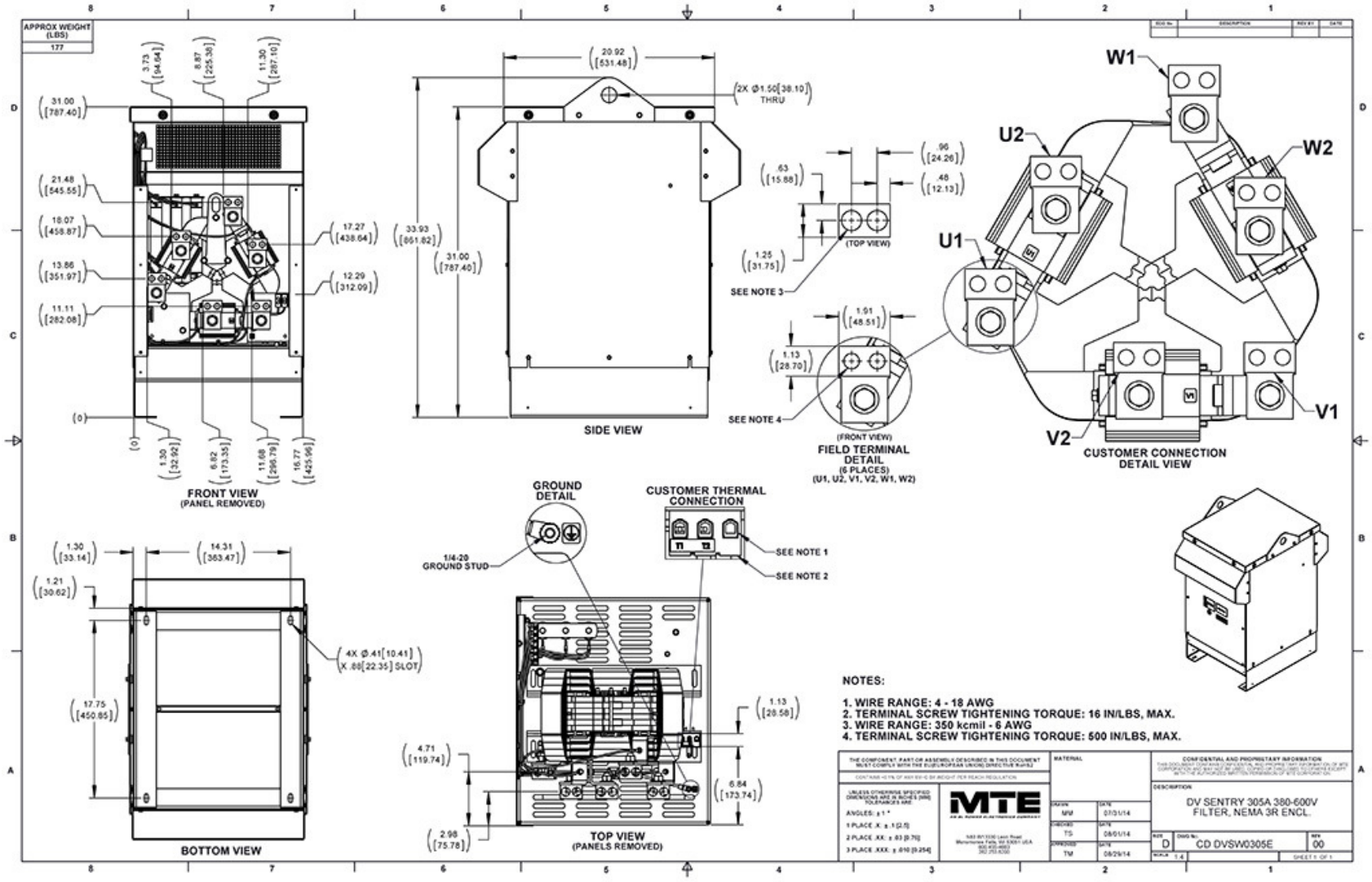

Figure A-65: DVSW0305E

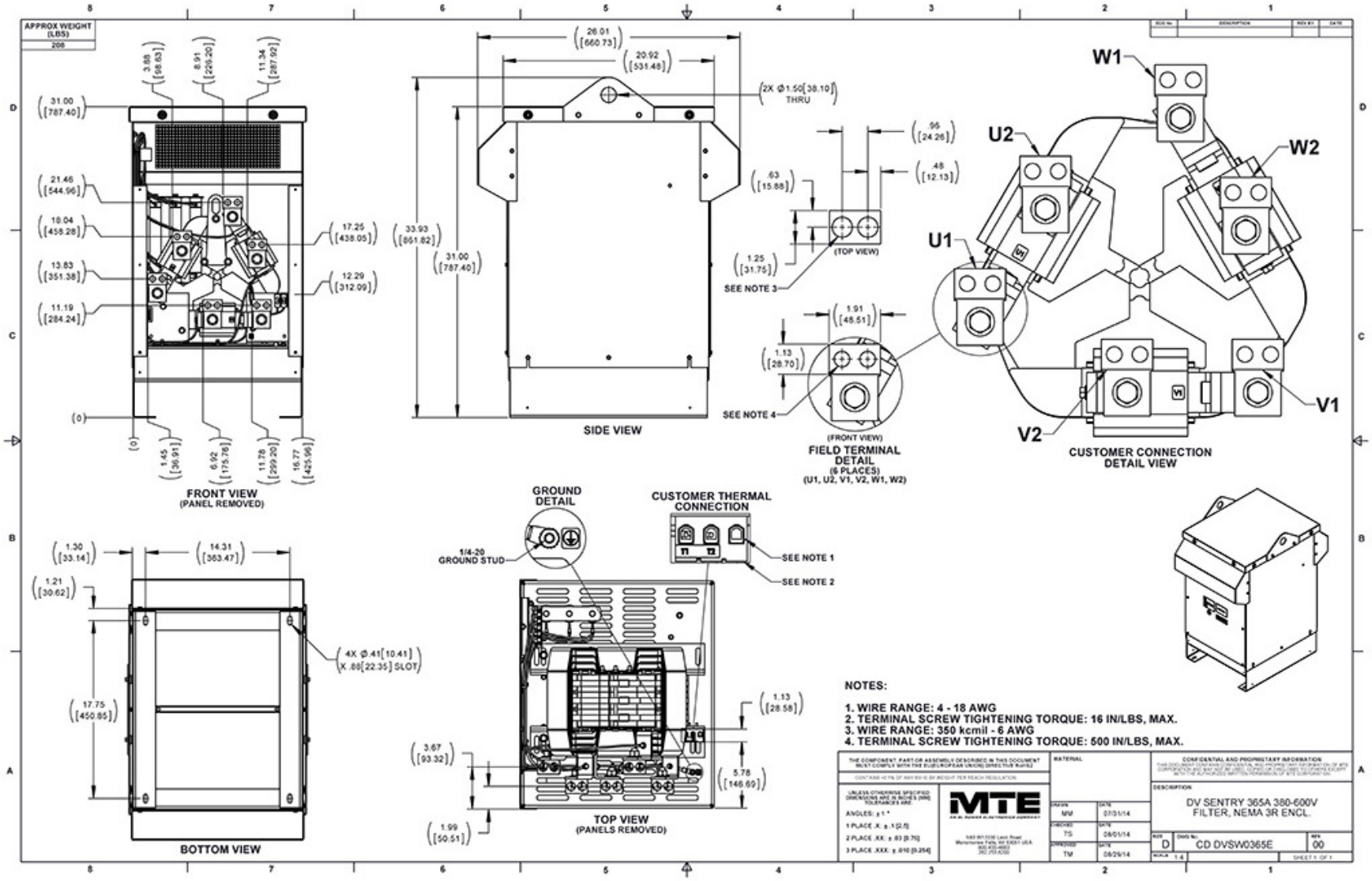

Figure A-66: DVSW0365E

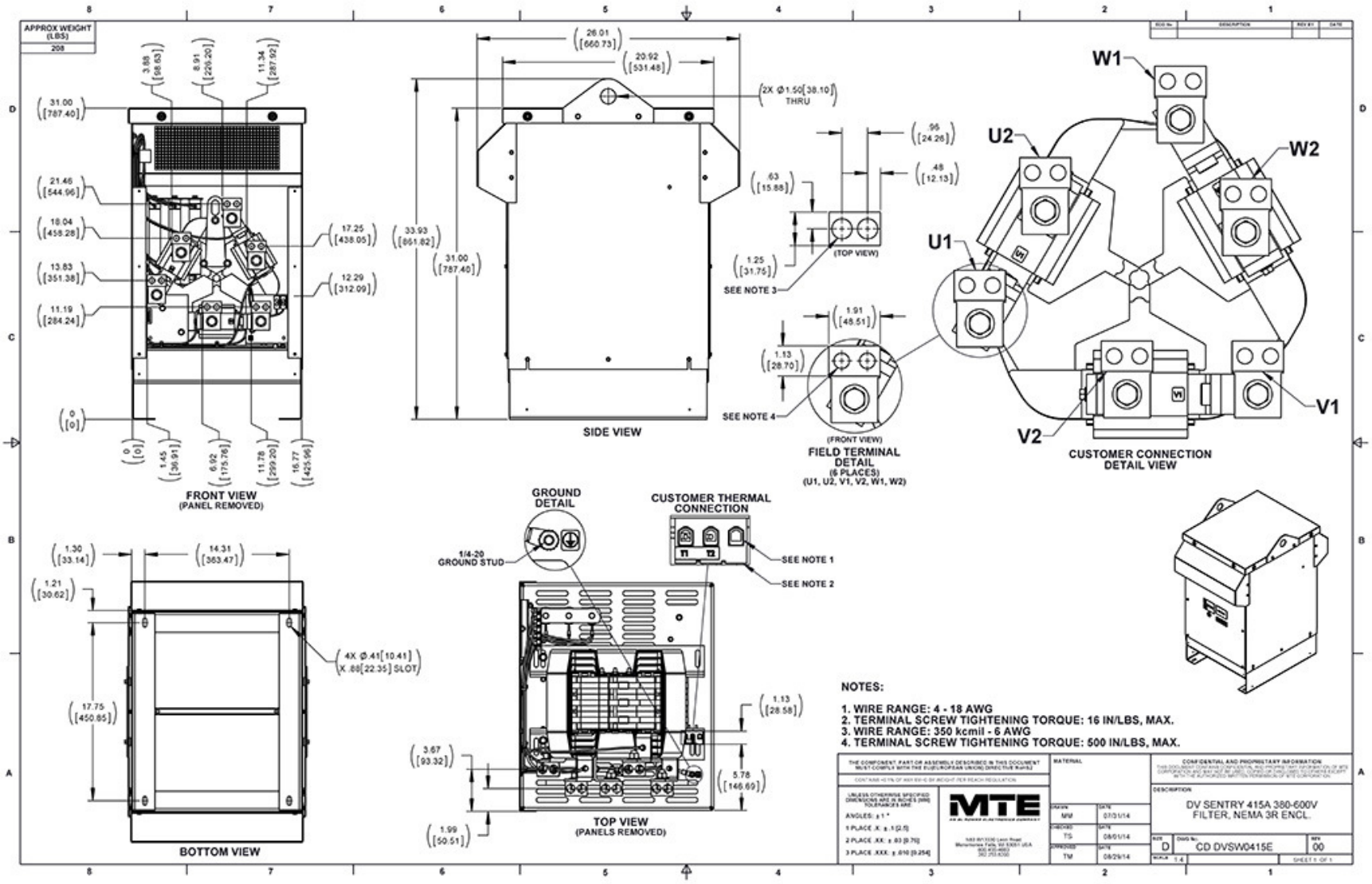

Figure A-67: DVSW0415E

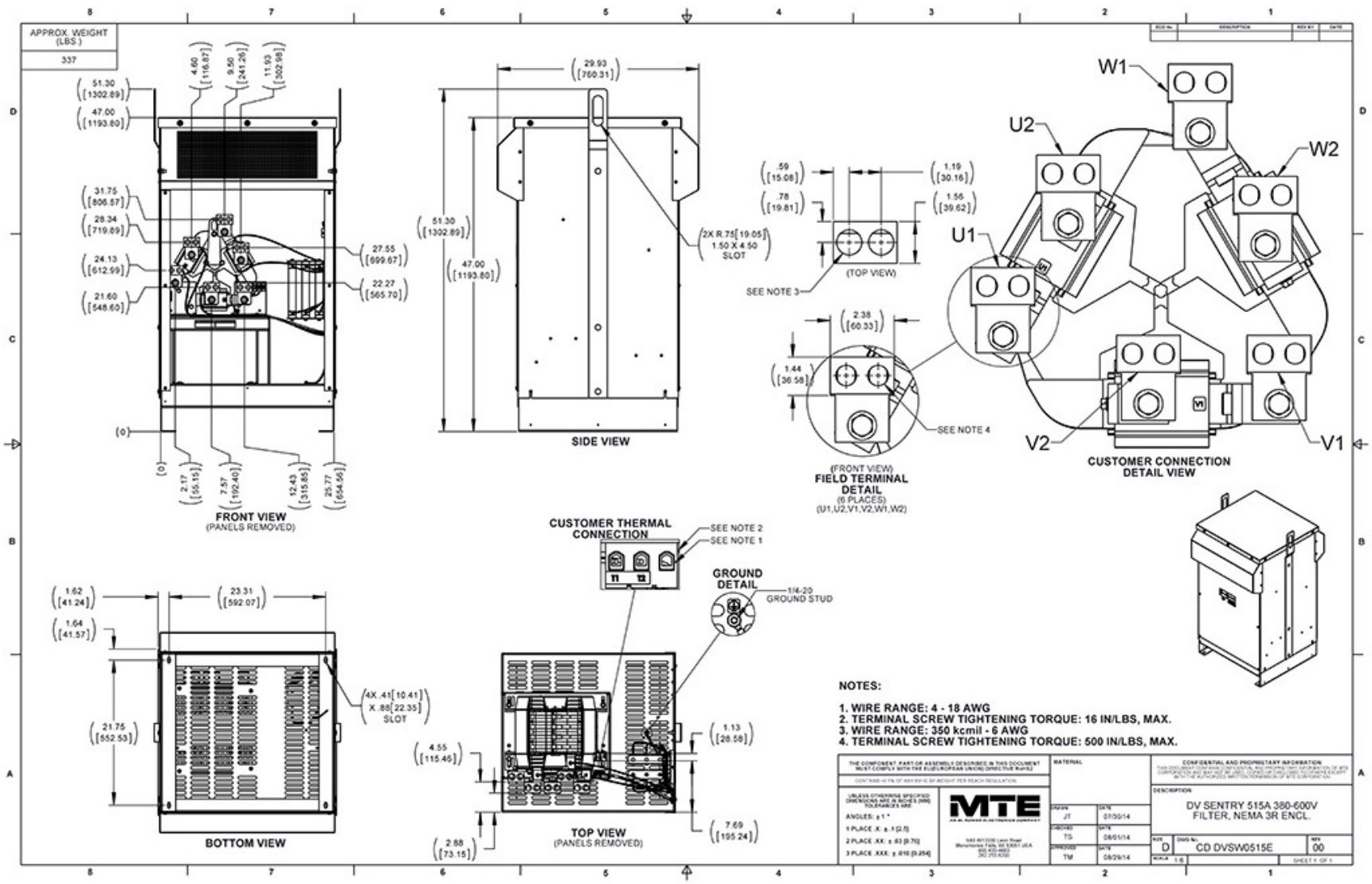

Figure A-68: DVSW0515E

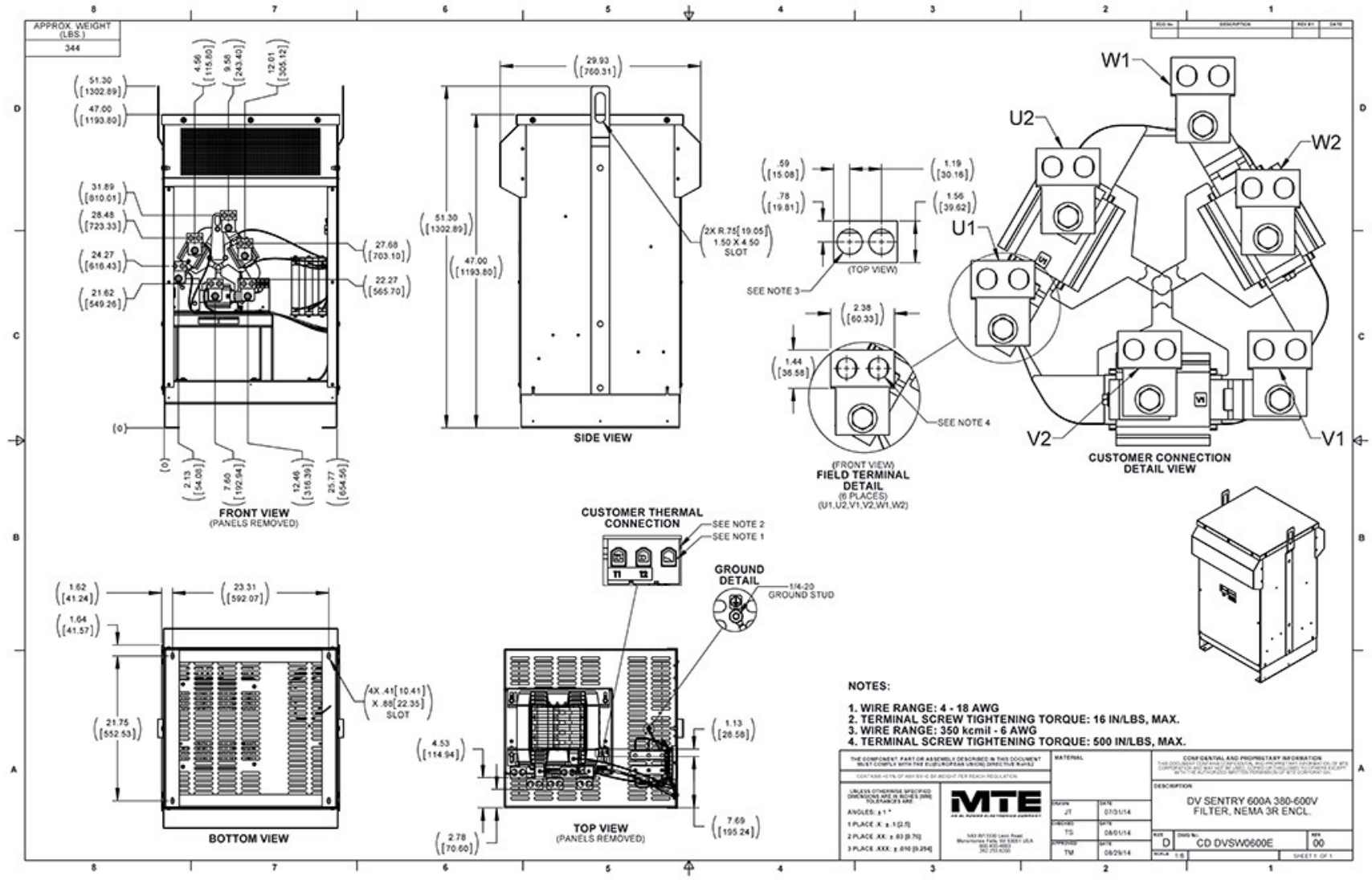

Figure A-69: DVSW0600E